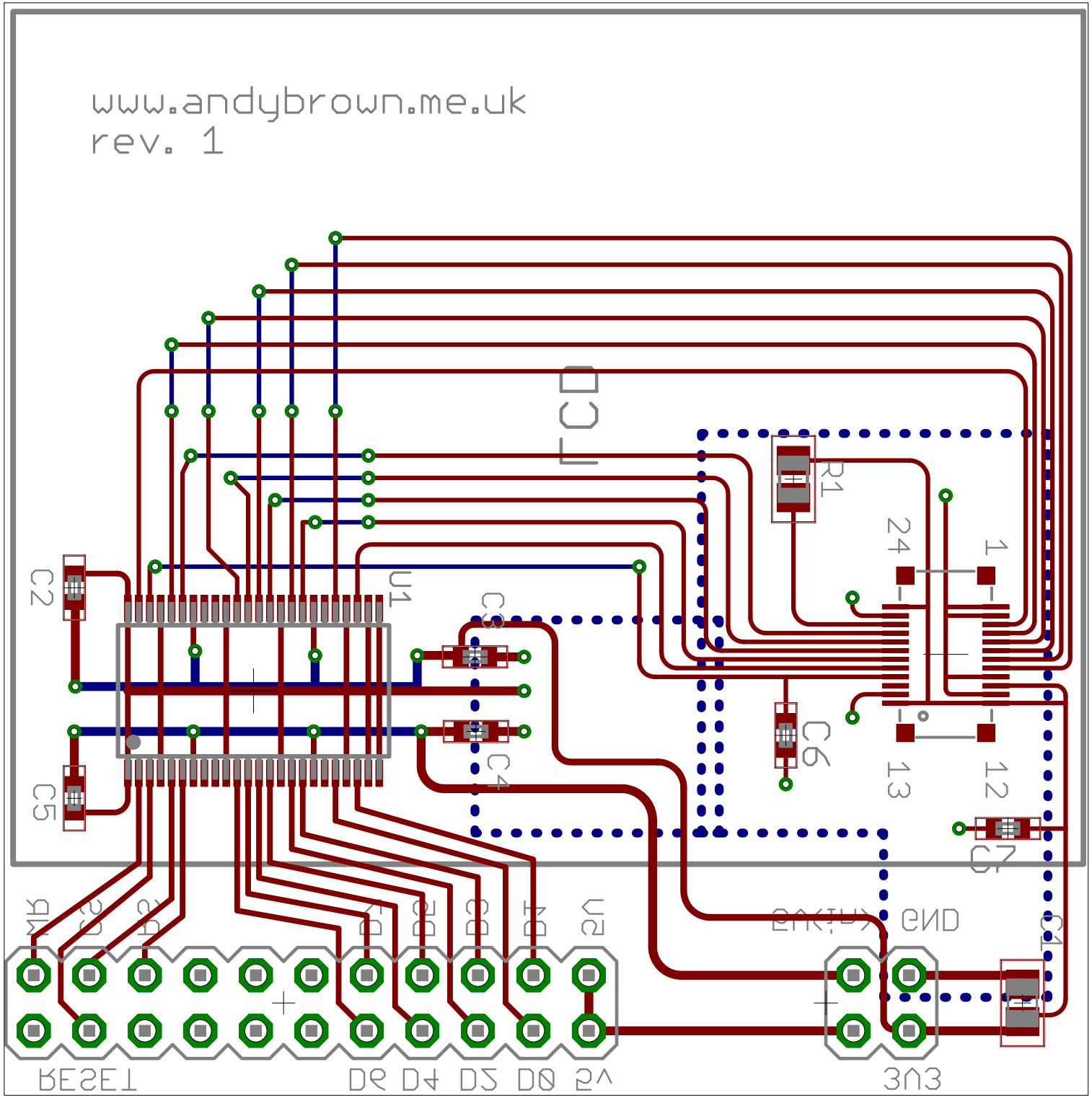
www.andybrown.me.uk
rev. 1
LCD
U1
C2
C5
C3
C4
R1
C6
C7
C1
24
1
13
12
RESET
D6 D4 D2 D0 5V
3V3
GND