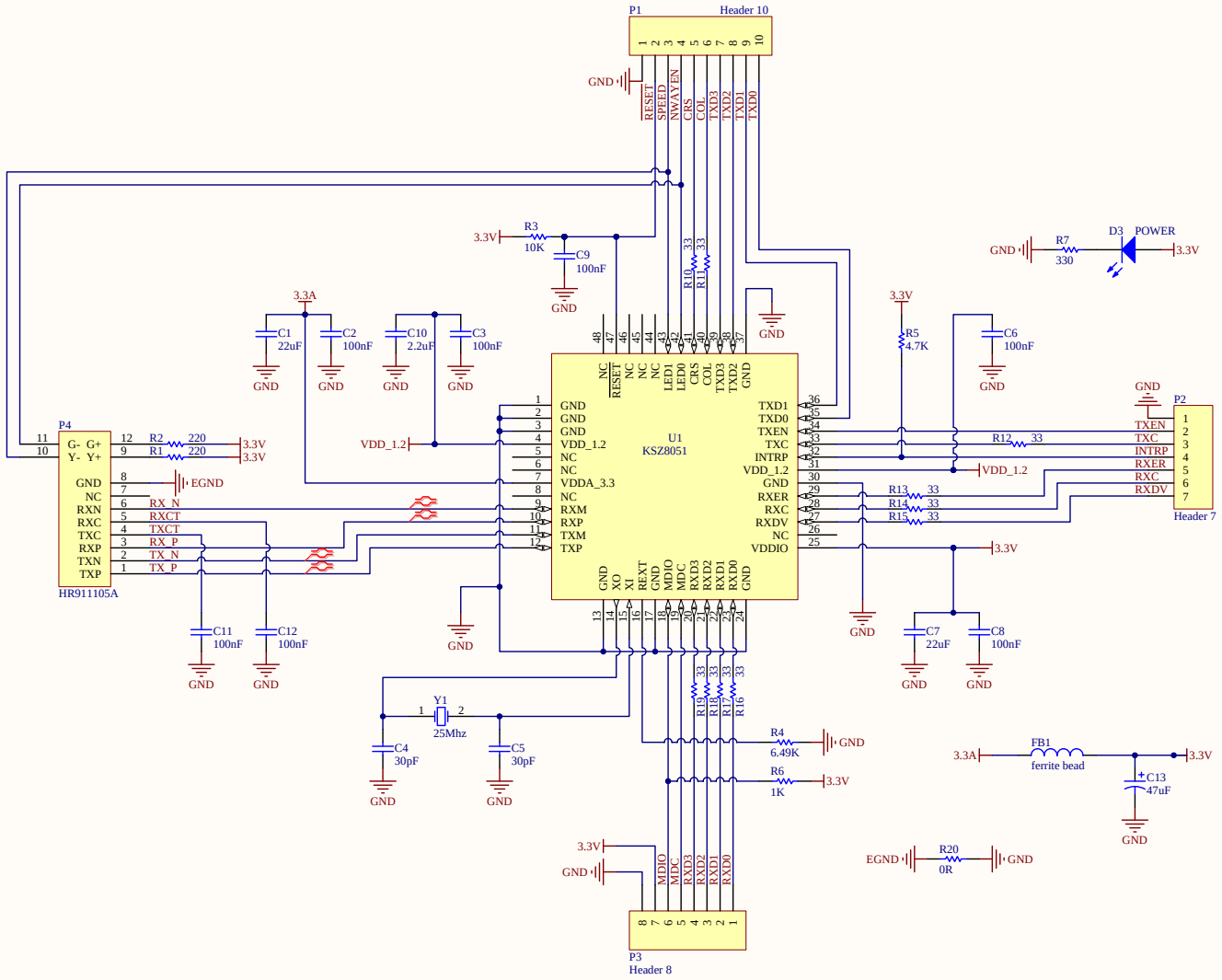

ANDY'S WORKSHOP

Title	*Micrel KSZ8051MLL Development Board*	
Size A3	Number 1	Revision 2
Date: 09/02/2014	Sheet 1 of 1	
File: P:\docs\..\ksz8051mll_v2.SchDoc	Drawn By: Andy Brown	